Installation and Safety Instructions
Flush Light Fitting

Safety Warnings

These instructions are for your safety. Please read through them thoroughly before use and retain them for future reference. If you are in any doubt about installing this product, consult a qualified electrician.

This product is only suitable for connection to a 220-240V~ 50Hz supply in accordance with current IEE wiring regulations, and should be installed in accordance with local building regulations.

This product is suitable for bathroom zone 2 and bathroom outside zones as specified by the right diagram. If this unit is being fitted in a room containing a bath or shower, a 30mA RCD must be used - in accordance with IEE regulations.

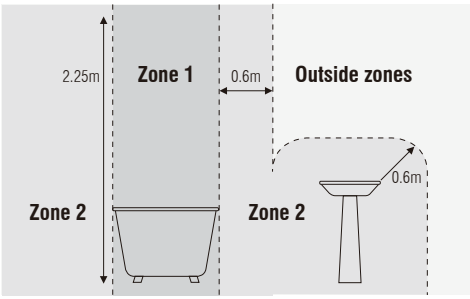

This product is rated IP44(definition e.g. splash proof / rain proof etc). It is suitable for use outdoors but should not be immersed in water or sited in areas likely to be heavily splashed, either from above or below, or subjected to standing water. Ensure that the screws and cable entry points are sealed to maintain the IP rating of the product.

This is a Class I product and must be Earthed. The terminal blocks are supplied according to requirements of the fitting.

IMPORTANT: Always switch off the mains supply during installation or maintenance. We recommend that the fuse is withdrawn or the circuit breaker switched off at the distribution board whilst work is in progress (turning off the light switch is not sufficient). Connection should be via a wall switch to enable safe isolation.

The product must be securely fixed to the mounting surface using the screws and wall plugs supplied. The screws and wall plugs supplied are suitable for "masonry" only. Other fixings are not supplied and must be purchased.

Decide on the position of the light fitting or remove existing light fitting. Note the position of the electrical connections, and ensure there is a solid mounting surface, Preferably a wooden joist or joist bridge, to support the weight of the light fitting.

Take care not to drill into any pipes or mains cables beneath the surface during mounting holes preparation.

Never put anything on the product or hang anything on any part of this product.

IMPORTANT: Ensure that all electrical connections are tight and that no loose strands are left out of the terminal.

Never fit bulbs of a higher wattage than those specified on the label (as these may cause over heating and damage the fitting).

Waste electrical products should not be disposed of with household waste. Please recycle where facilities exist. Check with your Local Authority or local store for recycling advice.

Care and maintenance

For bulb replacement, switch off the product (preferably, isolate it at the distribution board) and allow it to cool down (Caution: bulb gets hot during use).

Clean with a dry cloth only. Do not use liquid or abrasive cleaners on this product.

Troubleshooting

When the bulb does not light after installation:

> Ensure there is no electricity failure.

> Ensure all the connections are secure.

If you have any doubt about installation/use of this product, consult a qualified electrician.

UK Manufacturer: BH17 7BY
EU Manufacturer: Brilliant AG,
Brilliantstrasse 1, D-27442 Gnarrenburg

120847_23062026

Assembly Instructions

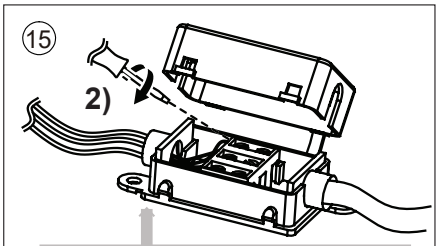

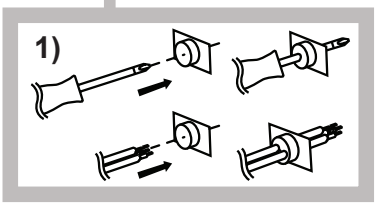

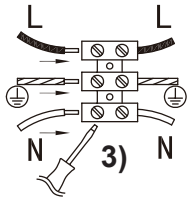

L = Brown or Red

N = Blue or Black

= Green / Yellow

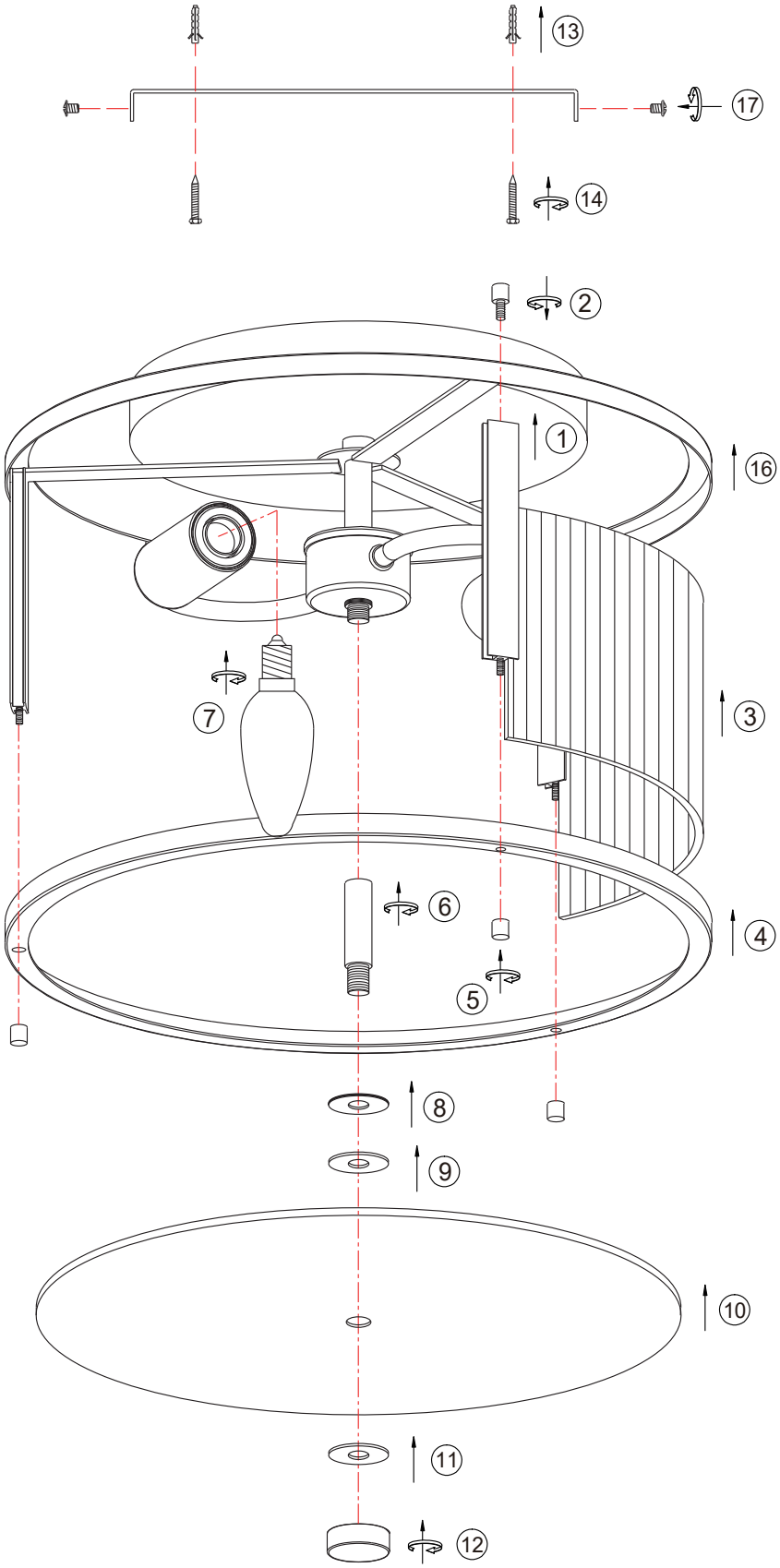

Scan QR code for multi-language

EN Scan QR code for multi-language
FR Scannez le code QR pour plusieurs langues
ES Escanee el código QR para varios idiomas
PL Zeskanuj kod QR dla wielu języków
DE Scannen Sie den QR-Code nach mehreren Sprachen
IT Scansiona il codice QR per multilingua

UK Manufacturer: BH17 7BY
EU Manufacturer: Brilliant AG,
Brilliantstrasse 1, D-27442 Gnarrenburg